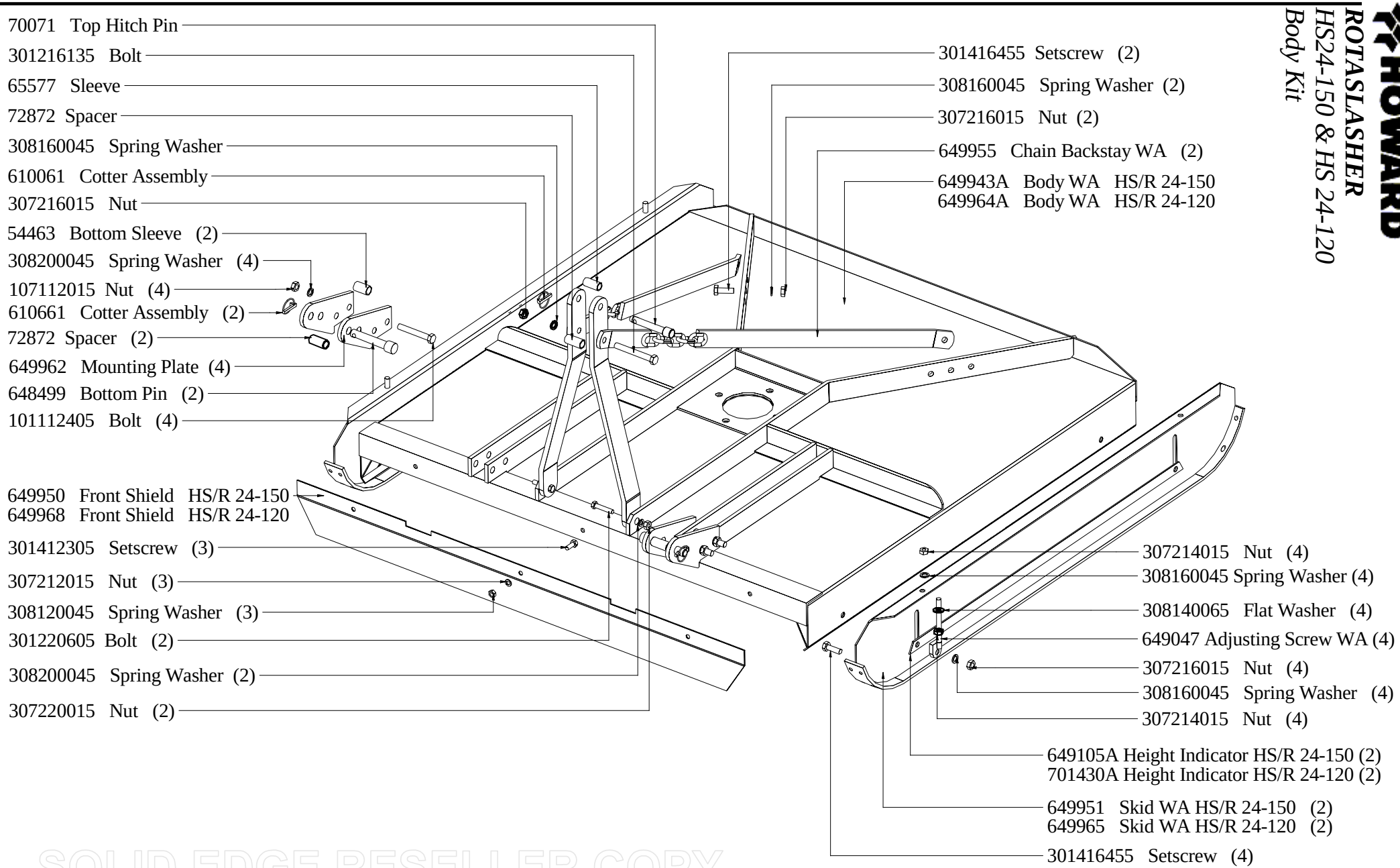

SOLID EDGE RESELLER COPY

Copyright **HOWARD**
HS/R24 NOVEMBER 2007