HOWARD

ROTAVATOR HA 16
Depth Control Roller Kit

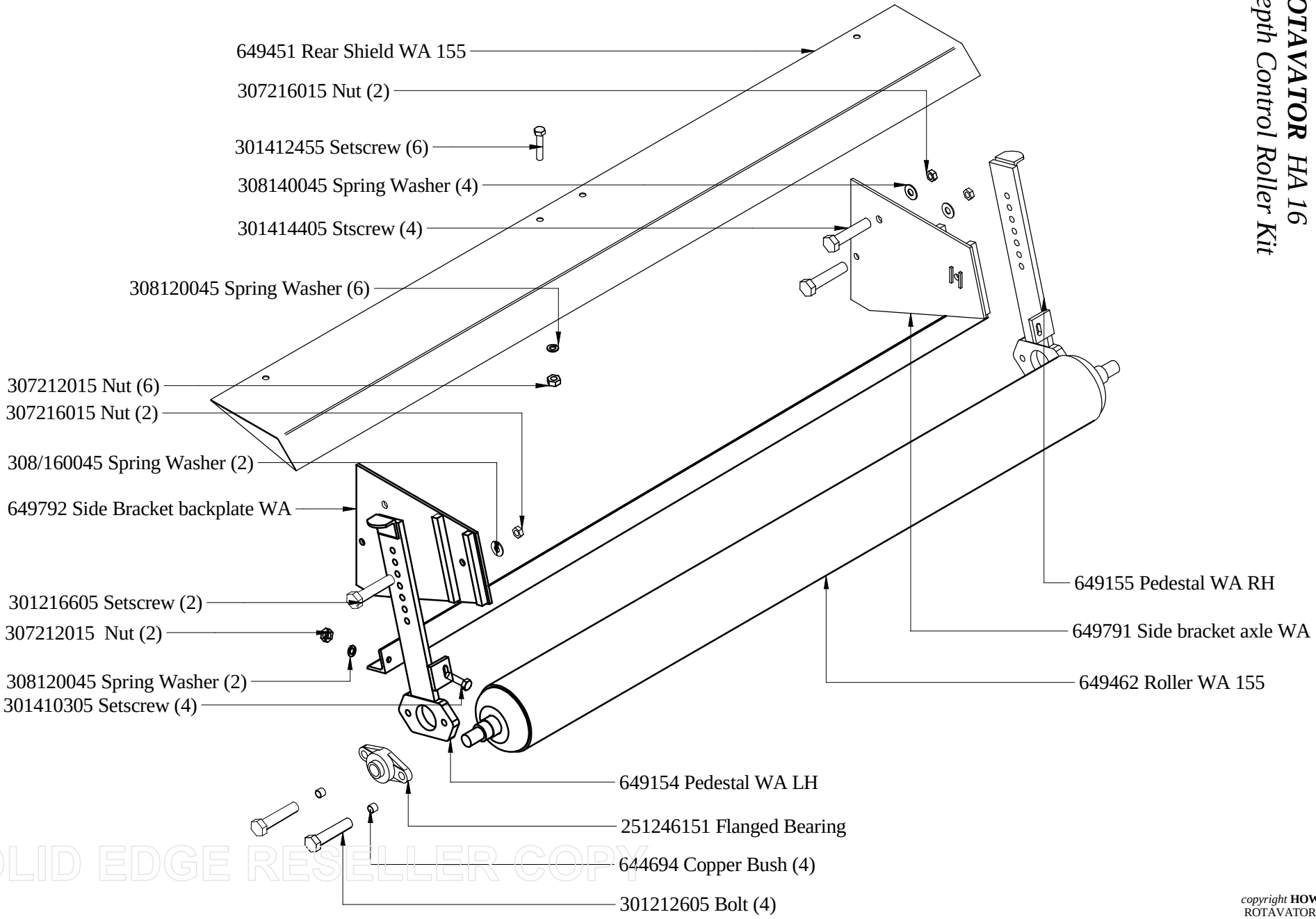

SOLID EDGE RESELLER COPY

copyright **HOWARD**